342014

Name of Commodity
TV Ceiling Mount

ASIT-LED003 32-57” (สีดำ)

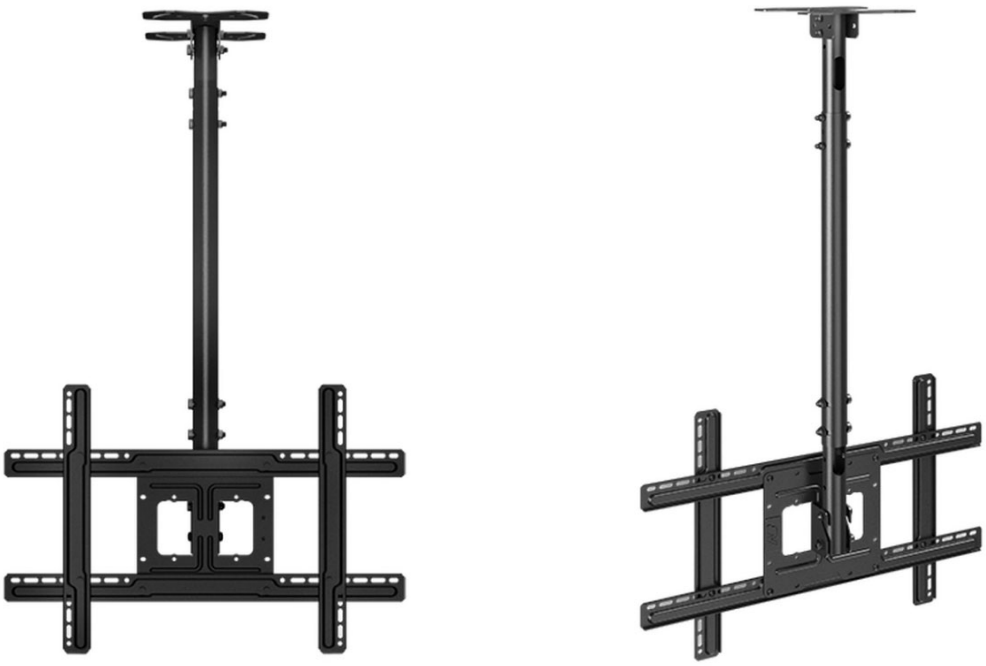

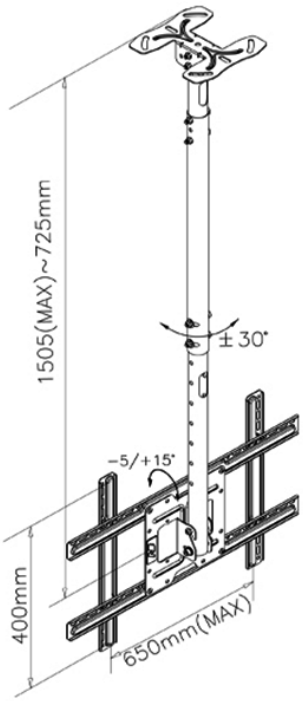

Specification :

- **Fits most 32-57” Flat Panel LED , LCD TV**
- VESA : 100*100~600*400mm
- Tilt : -5°~ +15°
- Roll : -30°~+30°
- The mount height adjustable from (725mm) to (1505mm)
- Load capacity : 150lbs (68.2 kg)
- Material : SPCC
- Surface treatment : Powder painting coating finished.
- Color : Black