Network Equipment สำหรับกล้องวงจรปิด

ASIT-EOC101

Ethernet to Coaxial / UTP Transceiver

ASIT-EOC101

- Compatible with IEEE802.3 for Ethernet over Coaxial transmission
- Transmission 10/100 Mbps Full Duplex Ethernet up to 2,500 meters or more RG6/U Full-duplex digital communications
- No PC required, plug & play
- Supports IP and megapixel camera or other 10/100Base-T IP devices
- One Transceiver which distributes it to multiple Transceiver
- Kits model:
  EA-EOU101: EA-EOC101 + 15-BT104
  EA-EOC101B: EA-EOC101 + 15-TV119

NEW Version

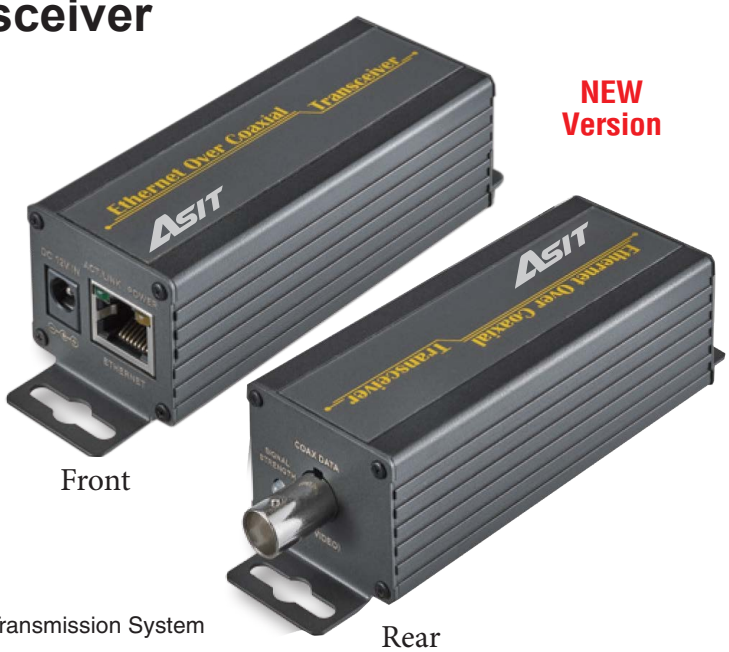

Application 1: Single Camera Ethernet over Coax EoC Transmission System

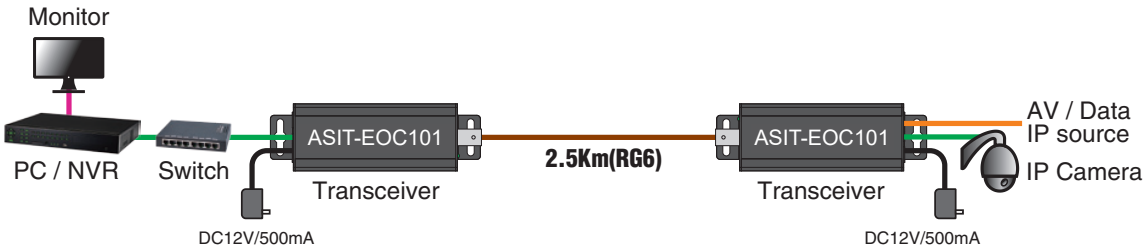

Application 2: Quadruple Camera Ethernet over Coax EoC Transmission System

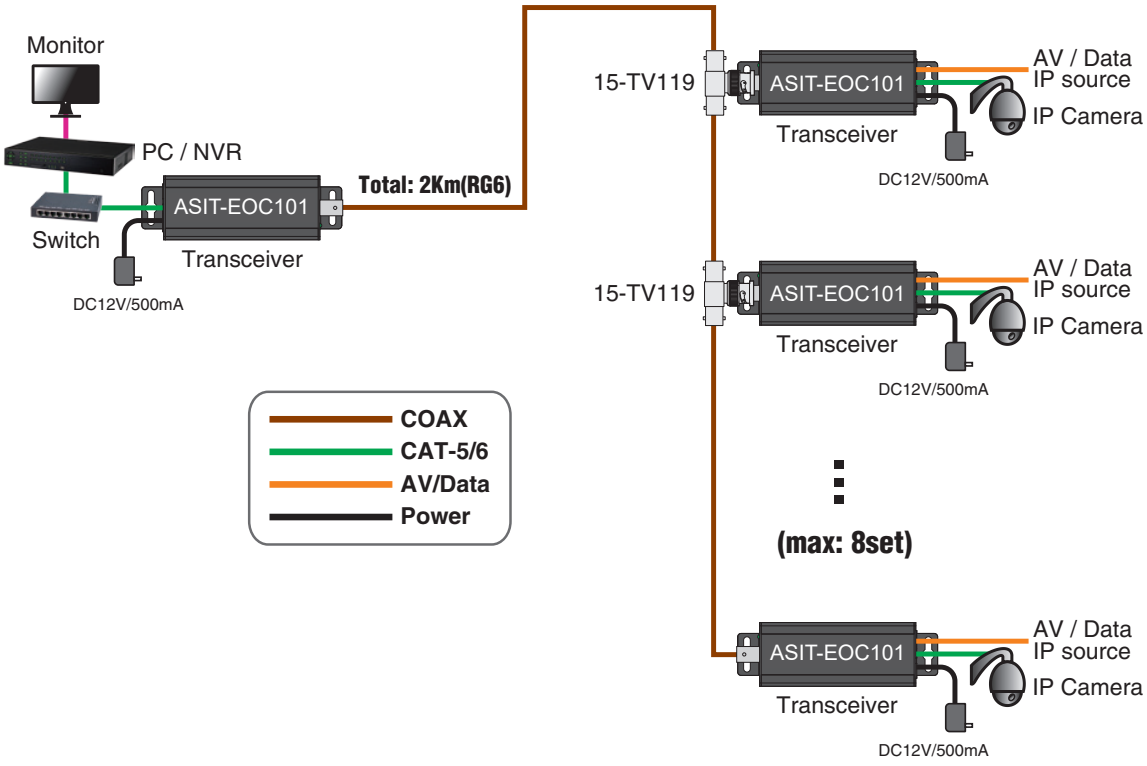

RoHs CE FC

Network Equipment สำหรับกล้องวงจรปิด

ASIT-EOC101

Application 3: Quadruple Device Ethernet over UTP Transmission System

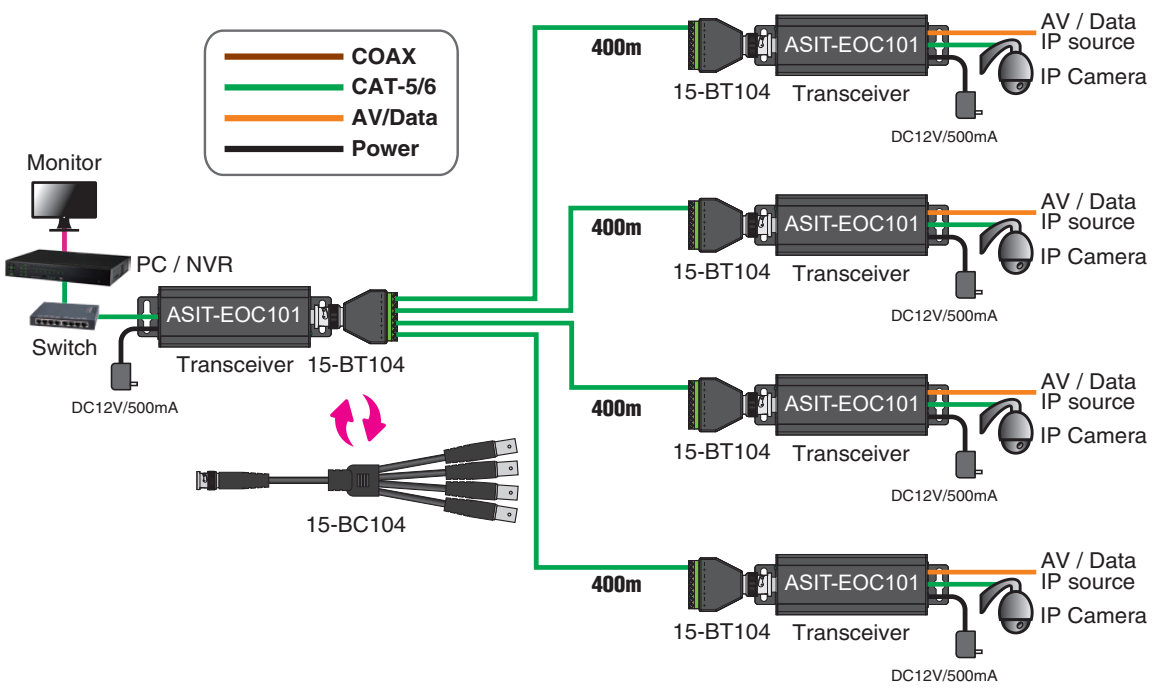

Optional Accessories

BNC to 2-Wire Adaptor
15-BT104

RJ45 to Screw Terminal Adaptor
15-JT104

BNC-T Adaptor
15-TV119

BNC 1to4 Cable
15-BC104

Model	ASIT-EOC101
Connector Type	1x BNC
Cable Type	75-ohm RG59, RG6, or RG11 video-grade coaxial cable
Max. Transmission Distance	2000m (6500ft.) for the RG6 coaxial cable
Ethernet Interface	
Connector Type	1 x RJ-45 with LEDs on Connector
Cable Type	Straight through or cross-over
Rate	10/100 Mbps for full duplexer
Indicators	
Color LED	Coaxial Data Signal Strength Green: GOOD / Amber: MEDIUM / Red: BAD
Yellow LED (on RJ45)	Power On
Green LED (on RJ45)	Link/Act.
Power	
Input Operating Voltage	DC 12V / 500mA
Power Consumption	1.2W
Mechanical & Environmental	
Operation Temperature	-10°C ~ 60°C
Humidity	20% to 85% RH. (non-condensing)
Storage Temperature	-25°C ~ 80°C
Dimensions (W×D×H) mm	38 x 120 x 33
Weight	175g